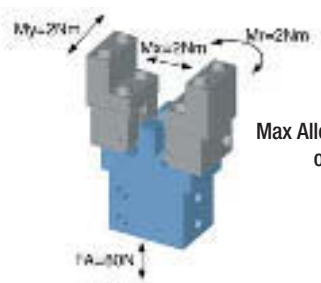

Max Allowable Forces on Jaws

Parallel gripper
with roller slide

Advantages, benefits, comparisons and tips!
Stacks of information all about this product are on page 59.

Gripping force as a function of jaw length

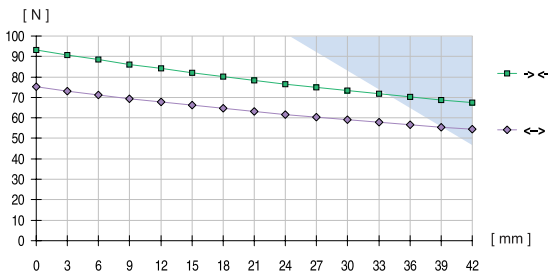

Order no.:
GP30
Drive:
pneum.
Stroke per jaw [mm]:
5
Gripping force in closing [N]:
94
Gripping force in opening [N]:
76
Self-locking via:
DSV1/8
Closing time/opening time [s]:
0,02
Repeatability ± [mm]:
0,05
Min./max. operating pressure [bar]:
3 / 8
Air volume per cycle [cm³]:
0,3
Min./max. operating temperature [°C]:
5 / 80
Temp. resistant version up to 150° C [add to part number]:
T2
Piston diameter [mm]:
20
Weight [kg]:
0,18

All data measured at 6 bar.
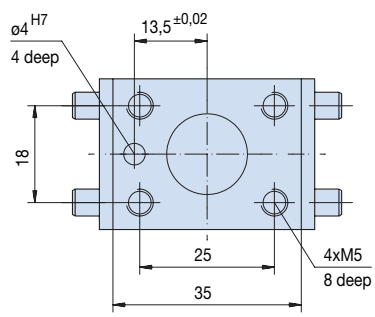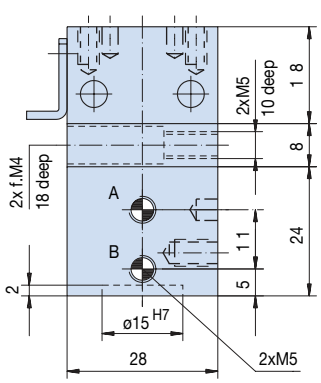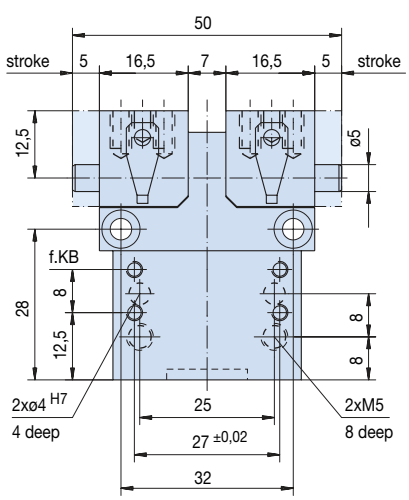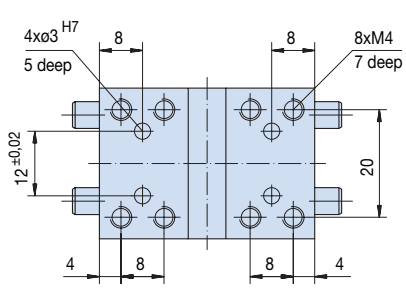
See Page 59 for Accessory list.