Parallel gripper
with extended T-slot

Advantages, benefits, comparisons and tips!
Stacks of information all about this product are on page 29.

Gripping force as a function of jaw length

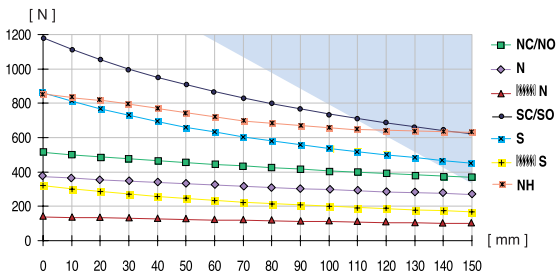

Colored area: increased wear and tear to be expected

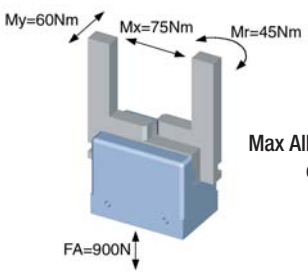

Max Allowable Forces on Jaws

Order no.:						
GP608 N	**GP608 NC**	**GP608 NO**	**GP608 S**	**GP608 SC**	**GP608 SO**	**GP608 NH**
Drive:						
pneum	pneum	pneum	pneum	pneum	pneum	hydr.
Stroke per jaw [mm]:						
8	8	8	4	4	4	8
Gripping force in closing and opening [N]:						
380	-	-	850	-	-	830
Gripping force in closing [N]:						
-	520	-	-	1180	-	-
Gripping force in opening [N]:						
-	-	520	-	-	1180	-
Self-locking via:						
DSV1/8	Spring	Spring	DSV1/8	Spring	Spring	-
Closing time/opening time [s]:						
0,012	0,015	0,015	0,012	0,015	0,015	0,35
Repeatability ± [mm]:						
0,025	0,025	0,025	0,025	0,025	0,025	0,025
Min./max. operating pressure [bar]:						
3 / 8	5 / 8	5 / 8	3 / 8	5 / 8	5 / 8	10 / 40
Air volume per cycle [cm³]:						
18	27	27	18	18	27	-
Oil volume per cycle [cm³]:						
-	-	-	-	-	-	8
Min./max. operating temperature [°C]:						
5 / 80	5 / 80	5 / 80	5 / 80	5 / 80	5 / 80	5 / 80
Temp. resistant version up to 150° C [add to part number]:						
T2	T2	T2	T2	T2	T2	T2
Piston diameter [mm]:						
35	35	35	35	35	35	24
Weight [kg]:						
0,53	0,58	0,58	0,53	0,58	0,58	0,56

All data measured at 6 bar (hydr. 30 bar).
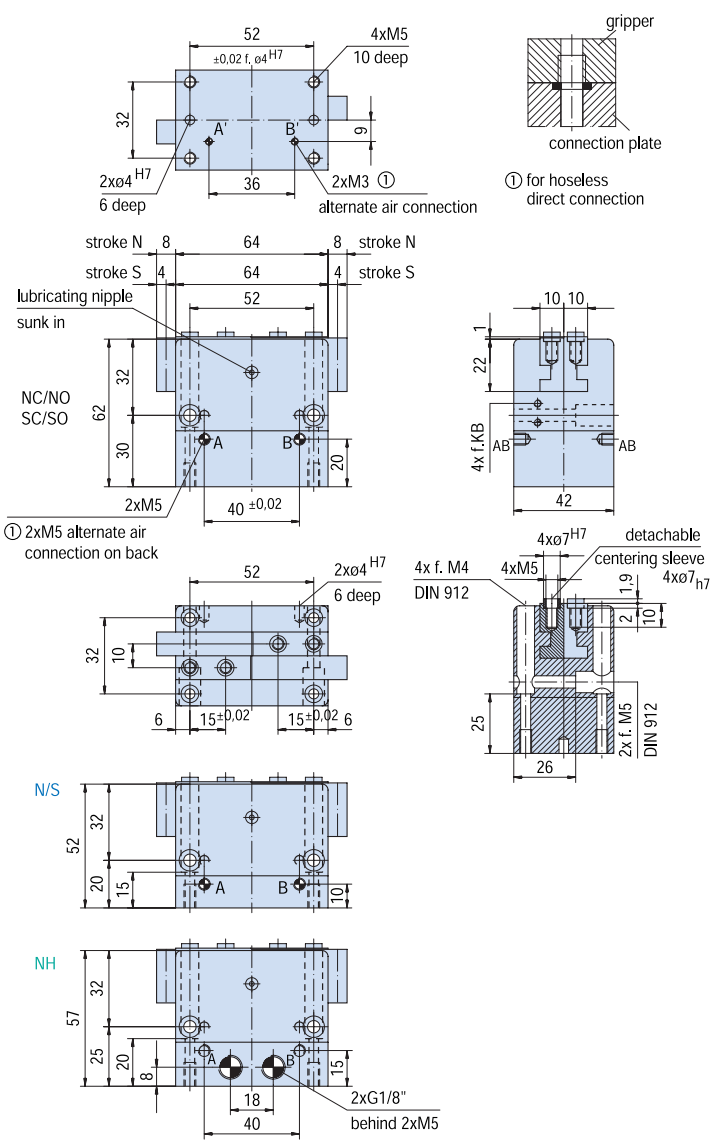
See Page 29 for Accessory list.