Parallel gripper
with ball bearing guide

Advantages, benefits, comparisons and tips!
Stacks of information all about this product are on page 67.

Gripping force as a function of jaw length

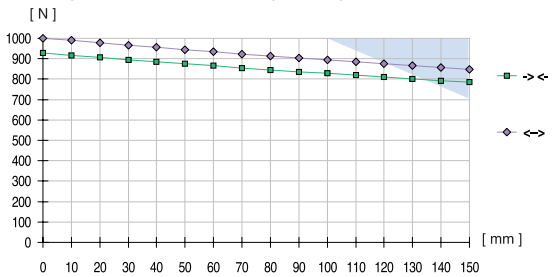

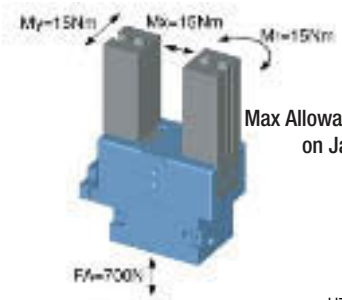

Max Allowable Forces on Jaws

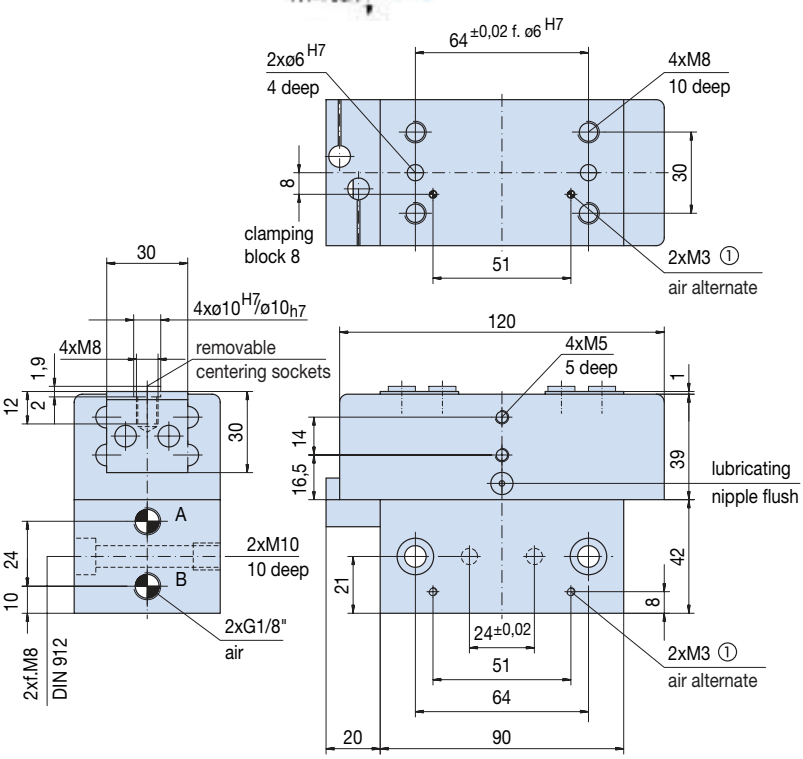

① for hoseless direct connection

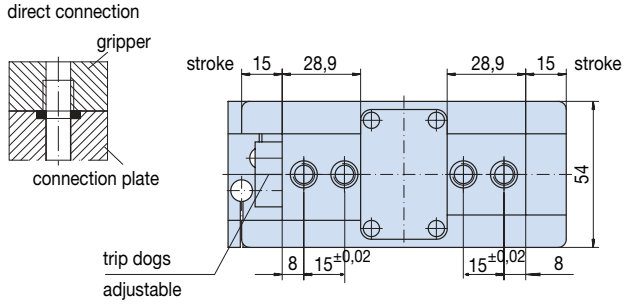

Order no.:
GP115
Drive:
pneum.
Stroke per jaw [mm]:
15
Gripping force in closing [N]:
930
Gripping force in opening [N]:
1000
Self-locking via:
DSV1/8
Closing time/opening time [s]:
0,04
Repeatability ± [mm]:
0,05
Min./max. operating pressure [bar]:
3 / 8
Air volume per cycle [cm³]:
57
Min./max. operating temperature [°C]:
5 / 80
Temp. resistant version up to 150° C [add to part number]:
T3
Piston diameter [mm]:
45
Weight [kg]:
2,1

All data measured at 6 bar.

See Page 67 for Accessory list.