Sommer-automatic
Grippers
Separators
Swivel units
Rotating jaws
Axial compensators
Tool changers
Linear cylinders
Shock absorbers
Rotary cylinders
Air vane motors
Vacuum components
Accessories
Quick finder

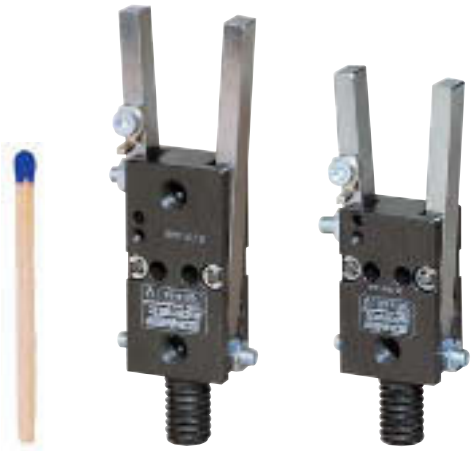

Compliant finger gripper

Advantages, benefits, comparisons and tips!
Stacks of information all about this product are on page 155.

Gripping force as a function of jaw length

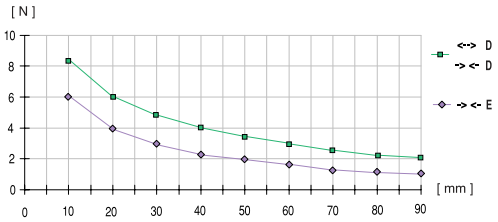

measured from top edge of housing

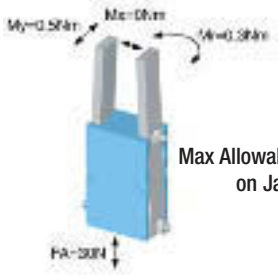

Max Allowable Forces on Jaws

GZ8-16E

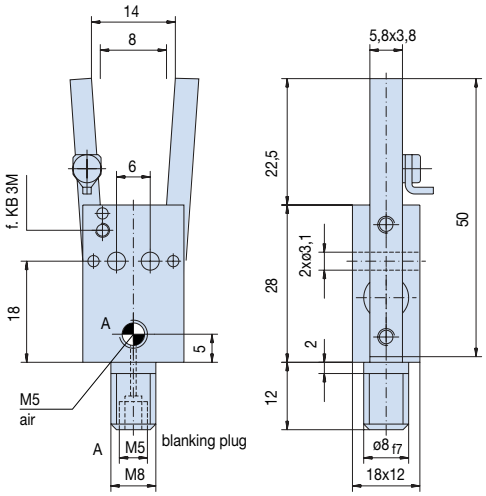

GZ8-16D

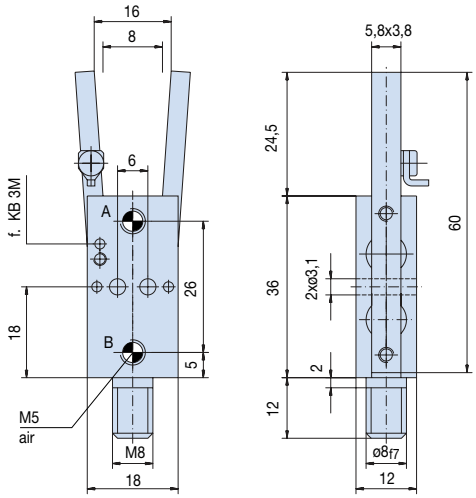

Order no.:						
GZ8-16 E	**GZ8-16 D**					
Drive:						
pneum.	pneum.					
Stroke per jaw adjustable [mm]:						
3	4					
Stroke per jaw adjustable [°]:						
5	5					
Gripping torque in closing [Nm]:						
0,12	0,15					
Gripping torque in opening [Nm]:						
-	0,23					
Self-locking via:						
DSV1/8	DSV1/8					
Closing time/opening time [s]:						
0,05	0,05					
Repeatability ± [mm]:						
0,1	0,1					
Min./max. operating pressure [bar]:						
5/8	5/8					
Air volume per cycle [cm³]:						
0,23	0,5					
Min./max. operating temperature [°C]:						
5/80	5/80					
Temp. resistant version up to 150° C [add to part number]:						
TS	TS					
Weight [kg]:						
0,05	0,047					

All data measured at 6 bar.

* Measured at 10 mm from top edge of housing.

See Page 155 for Accessory list.